DOCUMENT NUMBER AND REVISION
VL-FS-TOP123FHD03T REV.P0
(TOP123FHD03T)

DOCUMENT TITLE:
FINAL SPECIFICATION
OF
TFT MODULE TYPE

CUSTOMER	航盛
CUSTOMER REFERENCE NO.	D8-440-R0279
MODEL NUMBER	TOP123FHD03T
REFERENCE NO.	AV123Z7M-L1M-DSP0
CUSTOMER APPROVAL	
DATE	

DISTRIBUTION LIST: MARKETING

PROPRIETARY NOTE
THIS SPECIFICATION IS THE PROPERTY OF **WISECOCO** HF AND SHALL NOT BE REPRODUCED OR COPIED WITHOUT THE WRITTEN PERMISSION OF **WISECOCO** HF AND MUST BE RETURNED TO **WISECOCO** HF UPON ITS REQUEST

B3 12.3 inch TDDI（中控）Final
Product Specification Rev.P0

SUPPLIER	Shenzhen Huai Zhi Technology Co.,Limited
FG-Code	AV123Z7M-L1M-DSP0
VX-Code	TOP123FHD03T

ITEM	BUYER SIGNATURE	DATE

ITEM	SUPPLIER SIGNATURE	DATE
Prepared		
Reviewed		
Approved		

Wisecoco®

PROPRIETARY NOTE
THIS SPECIFICATION IS THE PROPERTY OF **WISECOCO** HF AND SHALL NOT BE REPRODUCED OR COPIED WITHOUT THE WRITTEN PERMISSION OF **WISECOCO** HF AND MUST BE RETURNED TO **WISECOCO** HF UPON ITS REQUEST

REV.	ECN NO.	DESCRIPTION OF CHANGES	DATE	PREPARED
P0	-	Initial Release	2020.2.10	Cao Hongtao Ma Yong Li Jing Xing Zhenzhou
		Updata VA/RT/Module Label	2020.05.15	Cao Hongtao
		修改前后肩设定	2020.08.19	Cao Hongtao
		LED色块下调，白点色坐标更新为(0.285，0.305)	2020.12.20	Cao Hongtao
		图纸背视图更新	2021.1.28	Cao Hongtao
		更新Page 26 标签内容	2021.3.10	Cao Hongtao

Wisecoco®

PROPRIETARY NOTE
THIS SPECIFICATION IS THE PROPERTY OF **WISECOCO** HF AND SHALL NOT BE REPRODUCED OR COPIED WITHOUT THE WRITTEN PERMISSION OF **WISECOCO** HF AND MUST BE RETURNED TO **WISECOCO** HF UPON ITS REQUEST

Contents

No.	Items	Page
1.0	General Description	4
2.0	Absolute Maximum Ratings	6
3.0	Electrical Specifications	7
4.0	Optical Specifications.	16
5.0	Mechanical Characteristics	20
6.0	Reliability	23
7.0	Packing	24
8.0	Product Serial Number	25
9.0	Precautions	26

1.0 GENERAL DESCRIPTION

1.1 Introduction

12.3 inch module is a color active matrix TFT LCD module using amorphous silicon TFT's (Thin Film Transistors) as an active switching devices. It is a transmissive type display operating in the normal black. The TFT-LCD has a 12.3 inch diagonally measured active area with resolutions (1920 horizontal by 720 vertical pixel arrays). Each pixel is divided into RED, GREEN, BLUE dots which are arranged in vertical stripe and this panel can display 16.7M colors.

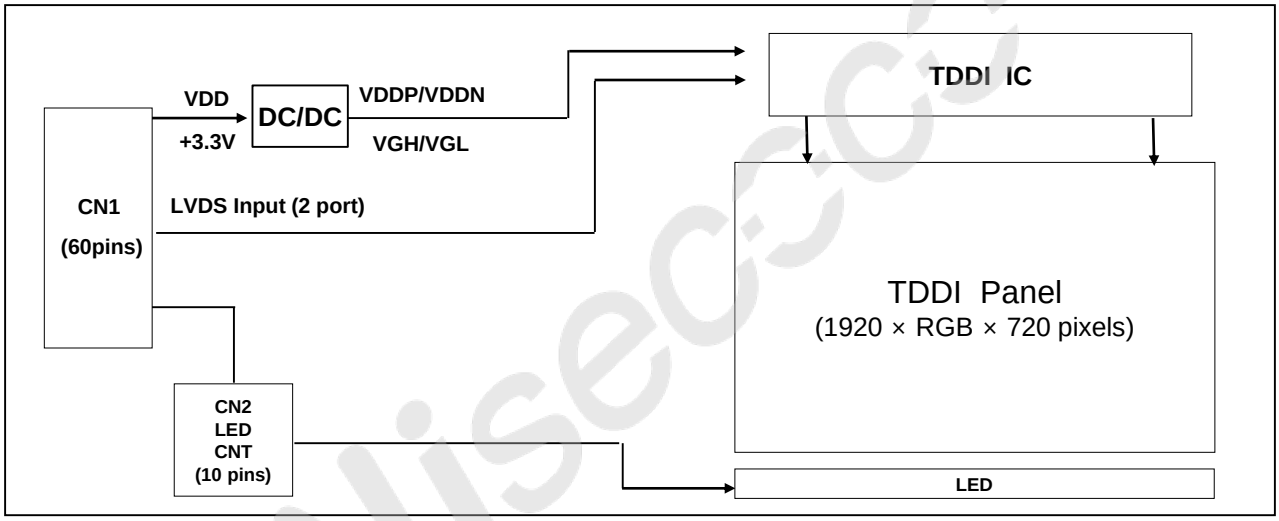

Figure 1-1 Block Diagram

1.2 Features

- Wide viewing angle (U/D/L/R)：89/89/89/89 typ.
- Color Gamut：75% typ.
- RoHS/Halogen Free
- LVDS Interface
- 0.5t glass

1.3 Application

- **Vehicle-mounted Production**

1.4 General Specification

Table 1-1 General Specifications

Parameter	Specification	Unit	Remarks
Active Area	292.032(H) × 109.512(V)	mm	8:3
Number of Pixels	1920(H) × RGB ×720(V)	Pixels	
Pixel Pitch	0.1521(H) ×0.1521 (V)	mm	
Pixel Arrangement	RGB Vertical Stripe		
Display Colors	16.7M	Colors	
Color Gamut	75%typ. 70%min.	%	NTSC
Display Mode	Normally Black		
Module Outline	302.63X125.61	mm	
Viewing Direction	Min. 80/80/80/80 Typ. 89/89/89/89	Deg.	L/R/U/D CR≥10
	Min. 55/55/45/35	Deg.	L/R/U/D CR≥100
Surface Coating	HC		

1.5.The TFT and CF Align Direction;

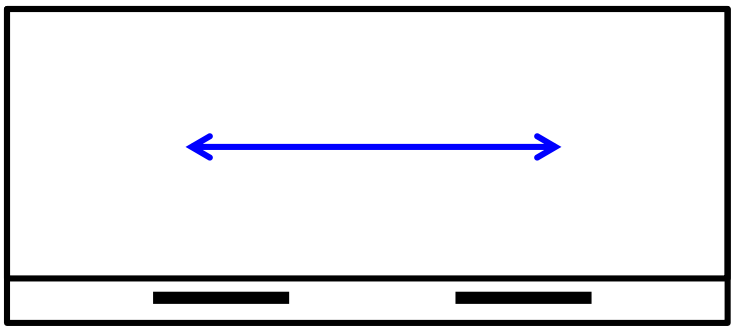

Figure 1-3 The TFT and CF Align Direction

PROPRIETARY NOTE
THIS SPECIFICATION IS THE PROPERTY OF **WISECOCO** HF AND SHALL NOT BE REPRODUCED OR COPIED WITHOUT THE WRITTEN PERMISSION OF **WISECOCO** HF AND MUST BE RETURNED TO **WISECOCO** HF UPON ITS REQUEST

2.0 ABSOLUTE MAXIMUM RATINGS

The followings are maximum values which, if exceed, may cause faulty operation or damage to the unit. The operational and non-operational maximum voltage and current values are listed in Table 2-1

Table 2-1 Environment Absolute Maximum Ratings

Parameter	Symbol	Min.	Max.	Unit	Remarks
LCD Logic Voltage	DVDD	-	3.6	V	Ta=25+/-2°C
Operating Temperature (Humidity)	T_{OP}	-30	+85	℃	
	RH	-	90	%	At 60°C
Storage Temperature (Humidity)	T_{ST}	-40	+90	℃	
	RH	-	90	%	At 60°C

PROPRIETARY NOTE
THIS SPECIFICATION IS THE PROPERTY OF **WISECOCO** HF AND SHALL NOT BE REPRODUCED OR COPIED WITHOUT THE WRITTEN PERMISSION OF **WISECOCO** HF AND MUST BE RETURNED TO **WISECOCO** HF UPON ITS REQUEST

3.0 ELECTRICAL SPECIFICATIONS

3.1 The LCD Module Electrical Interface Connection

Table 3-1 Pin Assignments for the LCD
(Recommended Connector typ: FH28-60S-0.5SH)

PIN	SYMBOL	Description	Remark
1	BIST	L:Normal H:Bist Mode	NC For Customer, Suggest connect to GND
2	GND	Ground	
3	SDA	Serial interface address and data	NC For Customer,Suggest connect to GND
4	SCL	Serial interface clock input	NC For Customer, Suggest connect to GND
5	CSB	Serial Interface chip enable signal	NC For Customer, Suggest connect to VDD
6	VDD	Power supply (3.3V)	Typ:3.3V
7	VDD	Power supply (3.3V)	Typ:3.3V
8	VDD	Power supply (3.3V)	Typ:3.3V
9	GND	Ground	
10	NC	No connection	Reserved for supplier OTP
11	RESET	Reset pin, active low	H: Normal, L:Reset,Note2
12	STBYB	Standby mode setting pin, active low	H: Normal, L: Standby,Note3
13	GND	Ground	
14	ELV3P	LVDS even data 3+	
15	ELV3N	LVDS even data 3-	
16	GND	Ground	
17	ELVCKP	LVDS even clock +	
18	ELVCKN	LVDS even clock -	
19	GND	Ground	
20	ELV2P	LVDS even data 2+	
21	ELV2N	LVDS even data 2-	
22	GND	Ground	
23	ELV1P	LVDS even data 1+	

PROPRIETARY NOTE
THIS SPECIFICATION IS THE PROPERTY OF **WISECOCO** HF AND SHALL NOT BE REPRODUCED OR COPIED WITHOUT THE WRITTEN PERMISSION OF **WISECOCO** HF AND MUST BE RETURNED TO **WISECOCO** HF UPON ITS REQUEST

PIN	SYMBOL	Description	Remark
24	ELV1N	LVDS even data 1-	
25	GND	Ground	
26	ELV0P	LVDS odd data 0+	
27	ELV0N	LVDS even data 0-	
28	GND	Ground	
29	OLV3P	LVDS odd data 3+	
30	OLV3N	LVDS odd data 3-	
31	GND	Ground	
32	OLVCKP	LVDS odd clock +	
33	OLVCKN	LVDS odd clock -	
34	GND	Ground	
35	OLV2P	LVDS odd data 2+	
36	OLV2N	LVDS odd data 2-	
37	GND	Ground	
38	OLV1P	LVDS odd data 1+	
39	OLV1N	LVDS odd data 1-	
40	GND	Ground	
41	OLV0P	LVDS odd data 0+	
42	OLV0N	LVDS odd data 0-	
43	GND	Ground	
44	**TP_I2C_SCL**	Touch signal	
45	**TP_I2C_SDA**	Touch signal	
46	**TSP_INT**	TP interrupt, active low	
47	**TSP_RST**	TP reset	Note1
48	GND	Ground	
49	FAIL_T	Fail detect	Normal:H, Fault:L, Note2
50	NC	No connection	
51	NTC	Thermistor Sensor	
52	NTC	Thermistor Sensor	
53	NC	No connection	
54	LEDK1	LED Cathode1	
55	LEDK2	LED Cathode1	
56	LEDK3	LED Cathode1	
57	LEDK4	LED Cathode1	
58	NC	No connection	
59	LEDA1	LED Anode 1	
60	LEDA2	LED Anode 2	

Note:
1.Suggest pull up resister 4.7KΩ
2.FAIL_DET pin:The FAIL_DET pin is not processed on the TFT and is directly connected by the connector to the source IC.
2.RESET pin: RESET pin have 10K ohm pull-up resistor and 1uF capacitor on the TFT.
3.STBYB pin: STBYB pin have 10K ohm pull-up resistor and 1uF capacitor on the TFT.

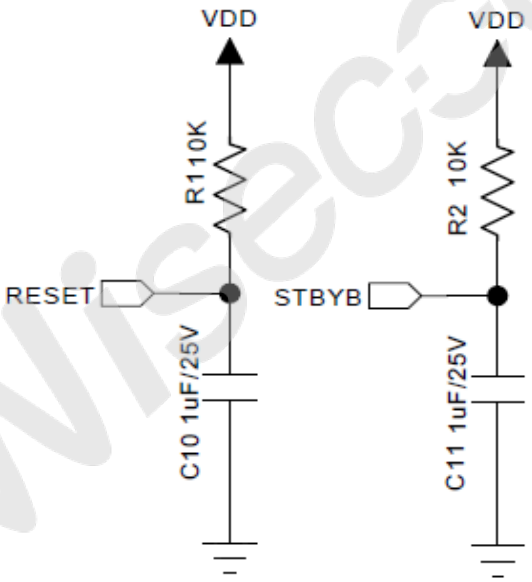

3.2 Scan direction and Pull up resister setting as the picture below;

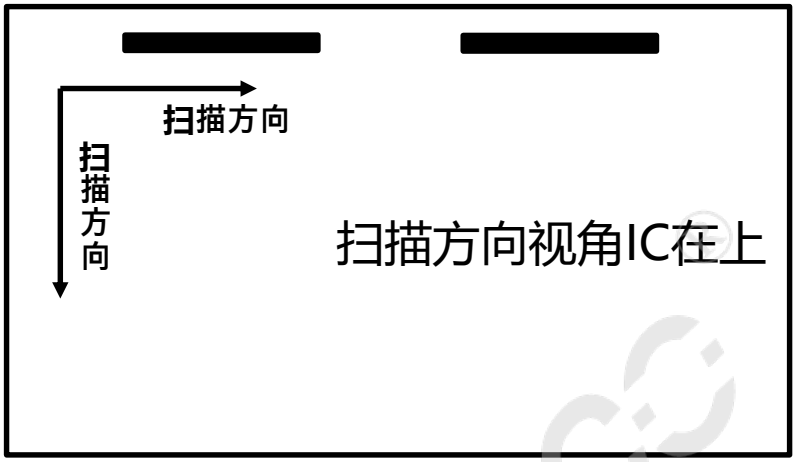

Figure 3-1 The direction and Pull up resister setting

3.3 The backlight Pin map;

Table 3-2 Pin Assignments for the Backlight
(Recommended Connector typ: FH28-10S-0.5SH)

PIN	SYMBOL	I/O	Description	Remark
1	**NTC**	**C**	Resistor	
2	**NTC**	**C**	Resistor	
3	**NC**	**C**	Not connect	
4	**LED_K1**	**O**	LED Cathode	
5	**LED_K2**	**O**	LED Cathode	
6	**LED_K3**	**O**	LED Cathode	
7	**LED_K4**	**O**	LED Cathode	
8	**NC**	**C**	Not connect	
9	**LED_A1**	**P**	LED Anode	
10	**LED_A2**	**P**	LED Anode	

Remark: For “I/O”, “I” is input; “O” is output; “P” is power ; “C” is passive

3.4 Electrical Specifications

Table 3-3 Electrical Specifications Ta=25+/-2°C

Parameter		Symbol	Values			Unit	Remark
			Min	Typ.	Max		
TFT Logic Power	Voltage	DVDD	3.0	3.3	3.6	V	
	Current	I_{DVDD}	-	300	800	mA	
Power supply Inrush current		I_{INRUSH}	-	-	2	A	Rising of VDD >5ms
Supply current of LED backlight		Per string		105	110	mA	9 LEDs
Total Supply current of LED Backlight		I_{LED}Total		420	440	mA	4 strings
Supply voltage of LED backlight		Per string	24.3	27.0	30.6	V	4 strings
LED life time		Hrs	7,000	-	-		L70
			30000				L50

Notes :
1: Current Max is based “Gray 255”; Current Typ is based “Vertical Color Bar” ;
2: BLU LED consists of 36 LEDs,4 strings * 9 packages, the typical drive current is 420mA.
3: Each string LED should be drove by constant current separately.
4: The lifetime 7000hr and 30000hr is determined as the time at which luminance of LED become 70% and 50% of the initial brightness at IPIN=105mA on condition of continuous operating at 25±2°C

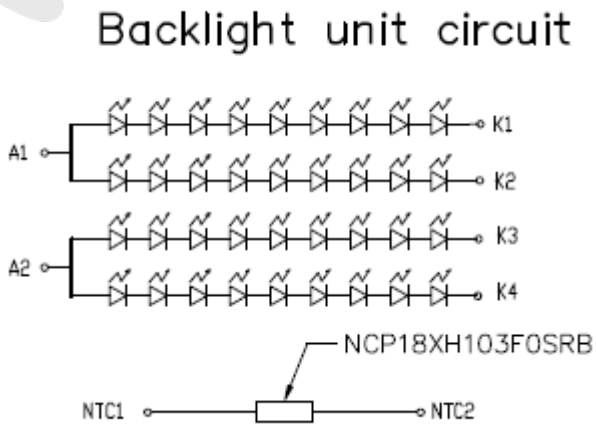

Figure 3-2 LED&NTC Diagram

3.5 LVDS Signal Timing

Table 3-4 LVDS Signal Timing

Parameter		Symbol	Min.	Typ.	Max.	Unit
DCLK Frequency(1 port)		1/tDCLK	-	48	-	MHz
Horizontal	Display Area	thd		960		tDCLK
	Period	th	-	1024	-	tDCLK
	Back Porch	thbp	-	16	-	tDCLK
	Front Porch	thfp	-	32	-	tDCLK
	Pulse Width	thpw	-	16	-	tDCLK
Vertical	Display Area	tvd		720		tDCLK
	Period	tv	-	781	-	tDCLK
	Back Porch	tvbp	-	8	-	tDCLK
	Front Porch	tvfp	-	45	-	tDCLK
	Pulse Width	tvpw	-	8	-	tDCLK
Clock period		Tcph	16.67	-	-	ns
Clock high time		TLVCH	-	4/(7*FLVDS)	-	ns
Clock low time		TLVCL	-	3/(7*FLVDS)	-	ns
PLL wake-up time		TPLLwkup	-	-	150	us

3.6 Signal Format

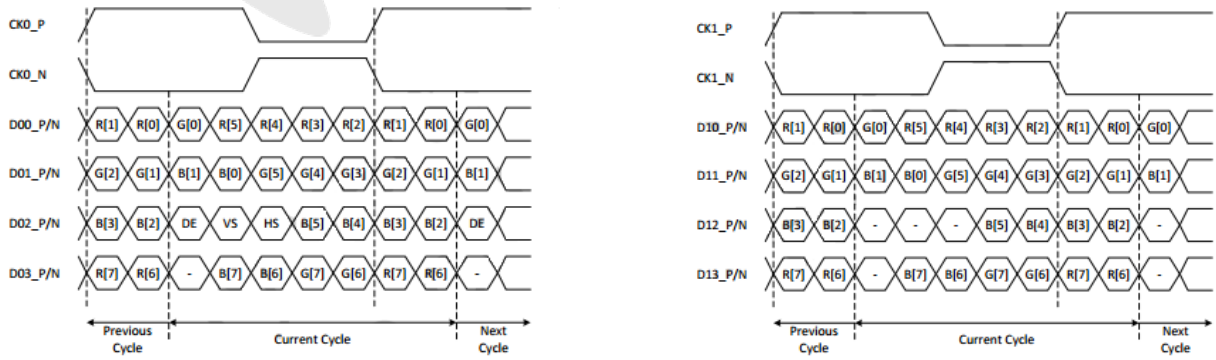

Figure 3-3 Signal Format

3.7 LVDS DC Characteristics

Table 3-5 LVDS DC Characteristics

Table: DC characteristics for LVDS

(VCI = 3.0~3.6V, AVDD=5.0~7.5V, AVEE=-5.0~-7.5V, VSS = AVSS = 0V, T_{OP} = 25℃)

Parameter	Symbol	Conditions	Specification			Unit
			Min.	Typ.	Max.	
For The Digital Circuit: LVDS Mode						
Operating frequency LVDS mode	FLVDS	By resolution	15	TBD	120 (TBD)	MHz
Differential input high threshold voltage (NOTE1)	RX_VTH	VCM_RX = 1.2v	-	-	+0.1	V
Differential input low threshold voltage (NOTE1)	RX_VTL	VCM_RX = 1.2v	-0.1	-	-	V
Differential input common mode voltage	VCM_RX		1	1.2	1.7-VID/2	V
Differential input voltage(1)	VID		0.2	-	0.6	V
Differential input leakage current	RXI_lkg		-10	-	+10	μA

NOTE1: Input Differential Voltage VID = VI+ - VI-

VI+ - VI- = VID < RX_VTL = "LOW"

VI+ - VI- = VID > RX_VTH = "HIGH"

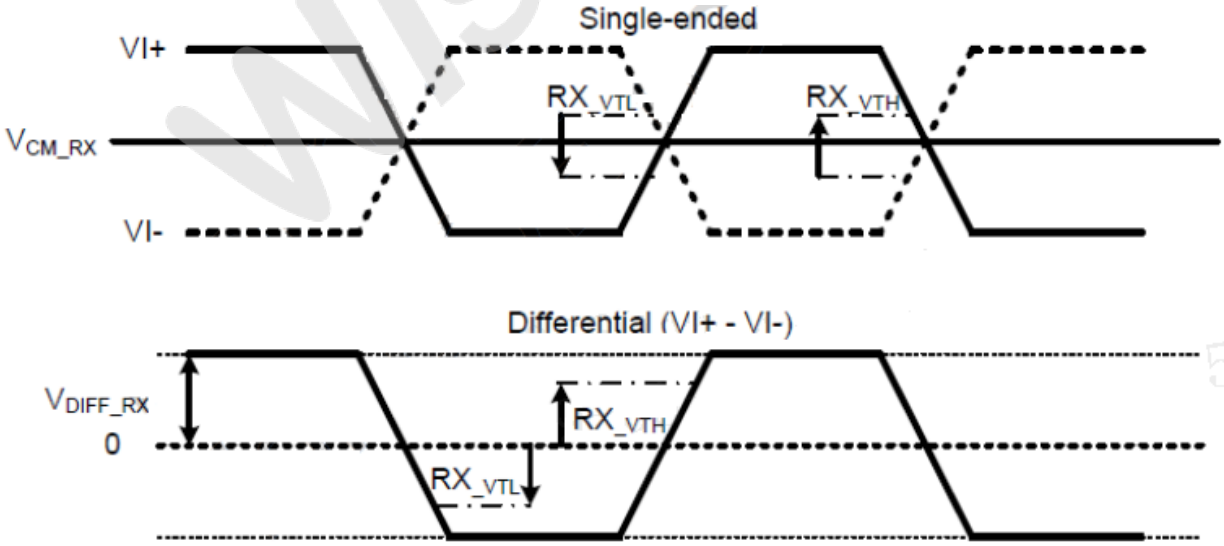

3.8 Power on/off sequence

Figure 3-4 Power on/off sequence

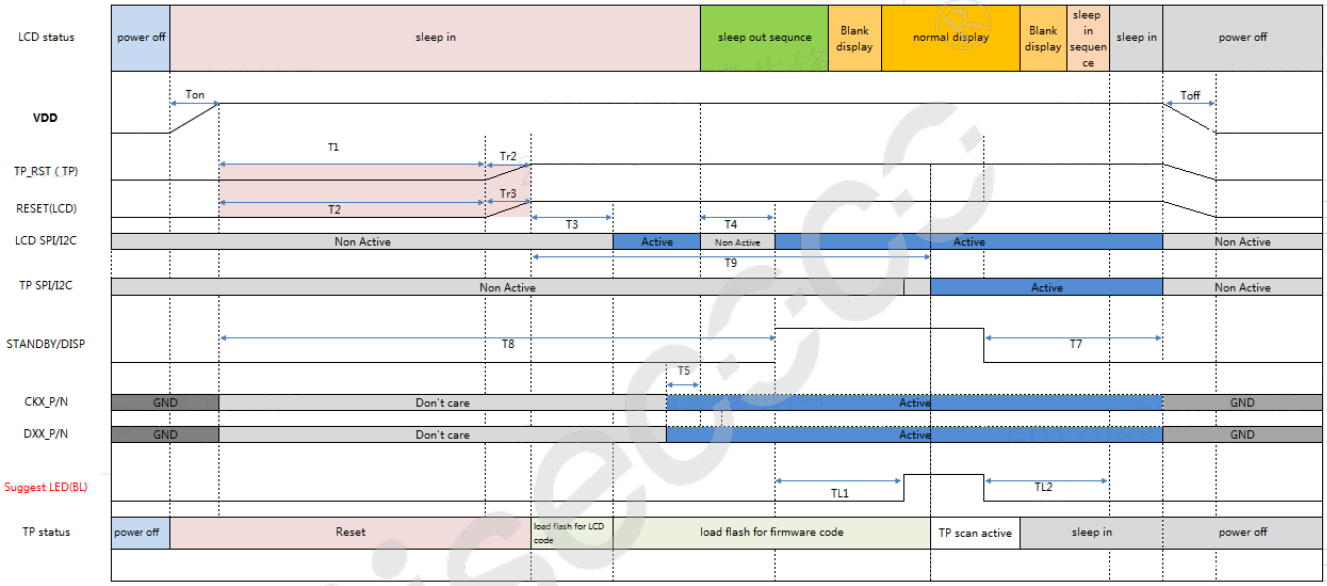

Parameter	Value			Unit	Remark
	Min	Typ	Max		
Ton/Toff	0.5	-	-	ms	VDD建立上电时间/VDD掉电时间
T1	15	-	-	ms	VDD上电到TP_RESET开始建立时间
T2	15	-	-	ms	VDD上电到LCD_RESET开始建立时间
Tr2	0	-	1	ms	TP_RESET从0V到3.3V过程时间
Tr3	0	-	1	ms	LCD_RESET从0V到3.3V过程时间
T3	120	(TBD)	-	ms	Load flash for LCD code
T4	50	-	-	ms	Sleep out到display on的时间
T5	1	-	-	ms	Sleep in之前送data的时间
T6	500	(TBD)	-	ms	Load flash for LCD code 和 load flash for firmware code的时间
T7	120	-	-	ms	Display off到VDD开始掉电时间
TL1	7	-	-	Frame	Standby建立到BL上电
TL2	2	-	-	Frame	BL下电到sleep in时间

Wisecoco®

3.9 TP Specifications

Item	Specification	Remark
Uniformity	U=Xmax*min/Ymax*min; > 85%	@6mm铜柱
Accuracy	中心≤1mm 边缘≤1.5mm	@6mm铜柱
Linearity	中心≤1mm 边缘≤1.5mm	@6mm铜柱
Sensitivity	无断线，且中心≤1mm	@6mm铜柱
Multi-Points Min Distance	Distance between 2 points≤12mm	@6mm铜柱
Response Latency	First touch Response Latency < 20ms	
Jitter	≤1mm	@6mm铜柱
Glove	Single click, double click, single line	@6mm铜柱
Moisture	Single click, double click, single line	@6mm铜柱
NO. of touch	最少5指触控	

4.0 OPTICAL SPECIFICATIONS

4.1 Overview

The test of Optical specifications shall be measured in a dark room (ambient luminance ≤ 1lux and temperature = 25±2℃) with the equipment of Luminance meter system (Goniometer system and TOPCON BM-5) and test unit shall be located at an approximate distance 50cm from the LCD surface at a viewing angle of θ and Φ equal to 0°. The center of the measuring spot on the Display surface shall stay fixed.

The backlight should be operating for 30 minutes prior to measurement.

Table 4-1 Optical Specifications

Parameter		Symbol	Condition	Min.	Typ.	Max.	Unit	Remark
Viewing Angle range	Horizontal	Θ_3	CR ≥ 10	80	89	-	Deg.	Note 1
		Θ_9		80	89	-		
	Vertical	Θ_{12}		80	89	-		
		Θ_6		80	89	-		
	Horizontal	Θ_3	CR≥100	55	-	-		
		Θ_9		55	-	-		
	Vertical	Θ_{12}		45	-	-		
		Θ_6		35	-	-		
Contrast Ratio		CR	Θ = 0° (Center) Normal Viewing Angle	1000	-	-		+25℃
				500	-	-		+85℃
White luminance uniformity		ΔY		70	-		%	Note 4
NTSC		%		70%	75%			
White Chromaticity		x_W		Typ-0.04	0.285	Typ+0.04	-	Simulation Value, Actual value will be updated after samples b e tested. Note 5
		y_W			0.305		-	
Reproduction of color	Red	x_R			0.645		-	
		y_R			0.336		-	
	Green	x_G			0.317		-	
		y_G			0.627		-	
	Blue	x_B			0.146		-	
		y_B			0.064		-	
Response Time (Rising / Falling)		T_{RT}	25℃ -20℃ -30℃	-	25 200 400	40 250 500	ms	Note 6
BLU De-rating		T	65℃	-	-	35%		F 4-4

Parameter	Condition	Min.	Typ.	Max.	Remark
Luminance	Θ = 0° (Center) Normal Viewing Angle	800nit	1000nit	-	on TFT surface 1 BEF + 1 DBEF
Flicker		-	-	-20dB	Interval Gray Pattern between L0 and L127, after 30s light up stably

Note :

1. Viewing angle is the angle at which the contrast ratio is greater than 10. The viewing are determined for the horizontal or 3, 9 o'clock direction and the vertical or 6, 12 o'clock direction with respect to the optical axis which is normal to the LCD surface.
2. Contrast measurements shall be made at viewing angle of θ= 0° and at the center of the LCD surface. Luminance shall be measured with all pixels in the view field set first to white, then to the dark (black) state. (See FIGURE 4-2) , Luminance Contrast Ratio (CR) is defined mathematically.

$$CR = \frac{\text{Luminance when displaying a white raster}}{\text{Luminance when displaying a black raster}}$$

3. Center trans of white is defined as the LCD surface. Luminance shall be measured with all pixels in the view field set first to white. This measurement shall be taken at the locations shown in FIGURE 4-2 for a total of the measurements per display.
4. The White luminance uniformity on LCD surface is then expressed as :
   ΔY = (Minimum Luminance of 9points / Maximum Luminance of 9points) * 100
5. The color chromaticity coordinates specified in Table 4-1, measurement refer FIGURE 4-2 viewing angle of θ= 0° and at the center of the LCD surface. Coordinates shall be calculated from the spectral data measured with all pixels first in red, green, blue and white. Measurement condition @BLU.
6. The electro-optical response time measurements shall be made as FIGURE 4-3 shown in Appendix by switching the "data" input signal ON and OFF. The times needed for the transmittance to change from 10% to 90% is Tr, and 90% to 10% is Tf.

4.2 OPTICAL TEST APPENDIX

Figure 4-1 The Definition of Vth & Vsat

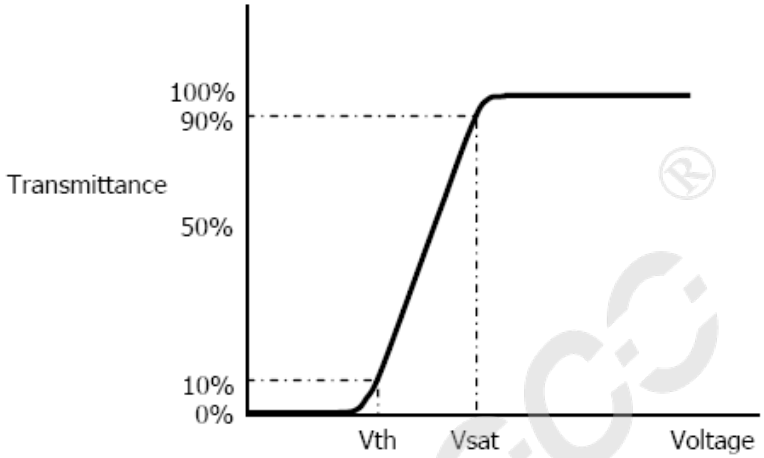

Figure 4-2 Measurement Set Up

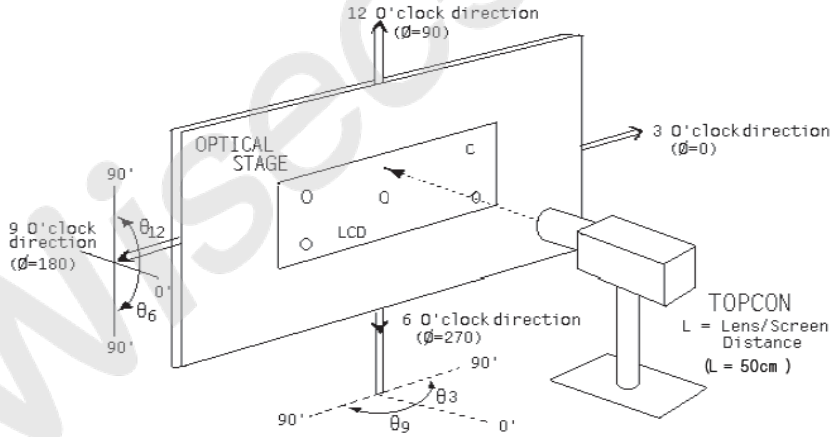

Figure 4-3 Response Time Testing

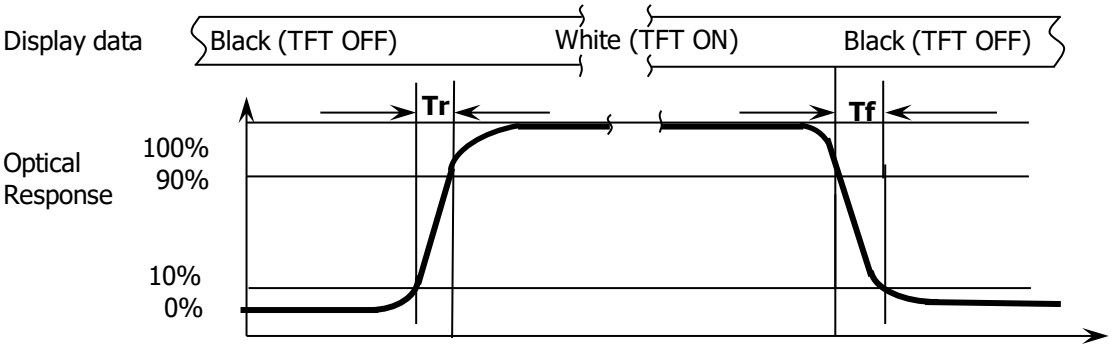

Figure 4-4 De-rating Curve

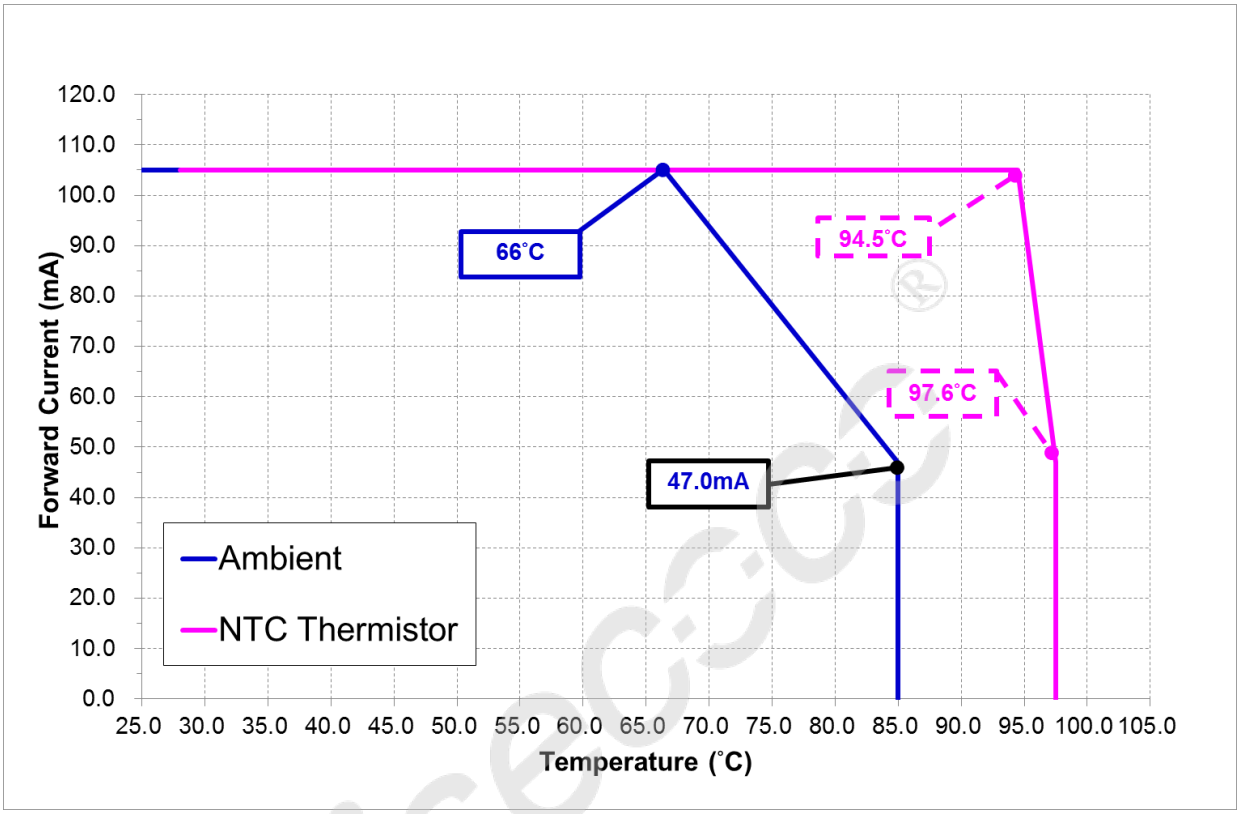

Note：
背光电流PWM: Ta=66℃时，PWM 100%，
Ta>66℃，BLU Start De-rating；Ta=85℃时，PWM 44%，Ta>85℃，BLU shut down。

5.0 MECHANICAL CHARACTERISTICS

5.1 Dimensional Requirements

Figure in next page shows mechanical outlines for the panel.

Table 5-1 Dimensional Parameters

Parameter	Specification	Unit
Active Area	292.032(H) × 109.512(V)	mm
Number of Pixels	1920(H) × RGB ×720(V)	Pixels
Pixel Pitch	0.1521(H) ×0.1521 (V)	mm
Pixel Arrangement	RGB Vertical Stripe	
Display Colors	16.7M	Colors
Display Mode	Normally Black	
Module Thickness	6.9	mm
Module Outline	302.63X125.61	mm
AA-MDL Outline L/R/U/D	5.3/5.3/10.8/5.3	mm

5.2 Outline (Front)

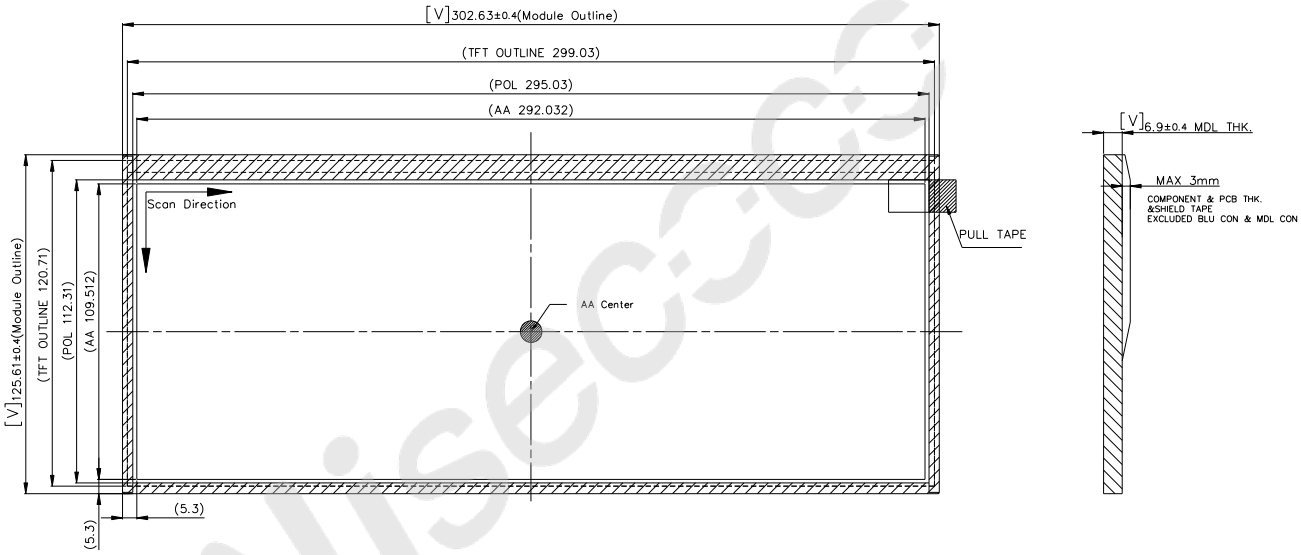

5.3 Outline (Rear)

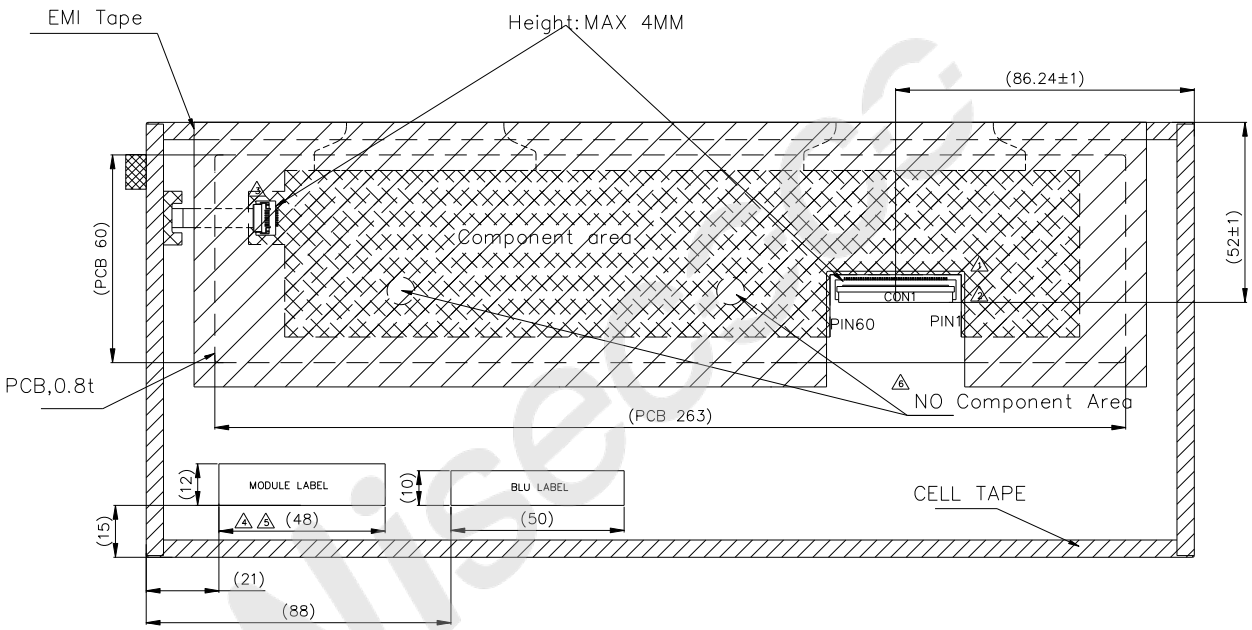

6.0 RELIABILITY

Table 6-1 Reliability test

No	Test Items	Conditions	Remark
1	High temperature storage test	Ta = 90 ℃, 1000 hrs	常温2hr后Operation恢复为OK；-40 ~ -30 ℃保证画面，不保证画质
2	Low temperature storage test	Ta = -40 ℃, 1000 hrs	
3	High temperature operation test	Ta = 85℃, 1000 hrs	
4	Low temperature operation test	Ta = -30 ℃, 1000 hrs	
5	High temperature & high humidity operation test	Ta = 60 ℃, 90%RH, 240 hrs	
6	Thermal shock	Ta = -40 ℃ ↔ 85 ℃ (0.5 hr), 200 cycle	Non-operation
7	Image Sticking	5*5 Pattern, 4hrs 25℃±2℃ check pattern Gray 127, after 5 mins, perpendicular view， ≤Level 2	
8	ESD test	Air Voltage:±8KV&±15KV Contact Voltage:±8KV R: 330Ω C: 150pF 5 time	
9	Vibration Test	Random: 0.015G^2/Hz, 5~200Hz -6dB/Octave, 200~400Hz XYZ 8H	

Note：After 1000hrs reliability test, the product only guarantee function normally without any fatal defect (non-display, line defect, abormal display etc), optical performance guaranteed within 500hrs reliability test.

PROPRIETARY NOTE
THIS SPECIFICATION IS THE PROPERTY OF **WISECOCO** HF AND SHALL NOT BE REPRODUCED OR COPIED WITHOUT THE WRITTEN PERMISSION OF **WISECOCO** HF AND MUST BE RETURNED TO **WISECOCO** HF UPON ITS REQUEST

7.0 Packing

7.1. Packing Description

-. Put a LCM into a Tray

Put an EPE Spacer on surface of each LCM

-. Capacity: 2pcs / Tray

1

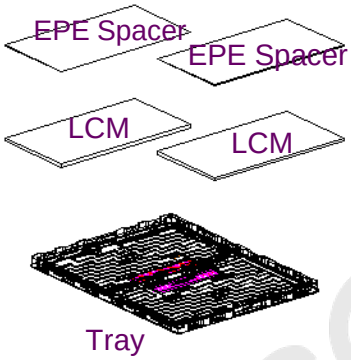

-. Put 11pcs PET Trays into a Vacuum Bag

-. (Include: put an empty Tray on top)

2

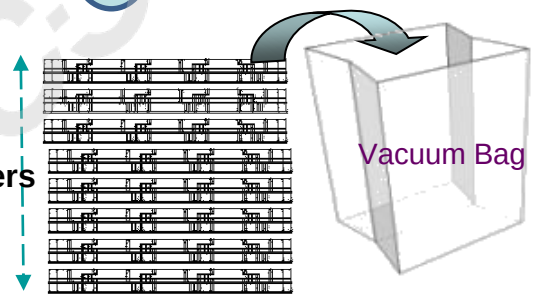

-.Put all PET Trays with Vacuum Bags into an Inner Box.

Put an EPE Board on top and an EPE Board on bottom.

-.Capacity：20pcs modules / Inner Box

3

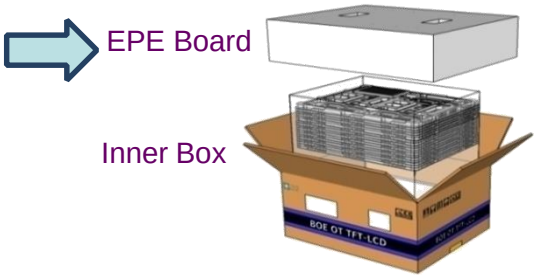

-. 12（2*2*3） Inner Boxes / Pallet

.Capacity: 240pcs/Pallet

4

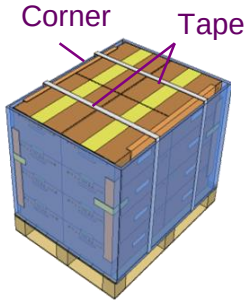

8.0 PRODUCT SERIAL NUMBER

8.1 MDL Label

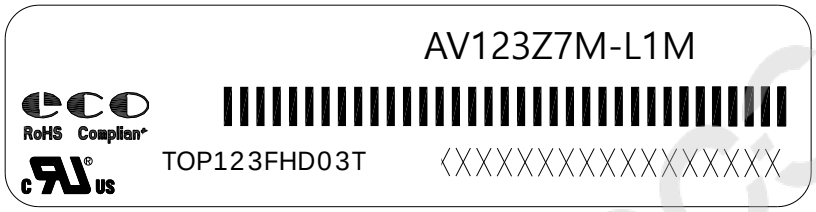

序列号标注部分需打印, 说明如下:
FG Code： AV123Z7M-L1M-DSP0
01.FG Code前12位：AV123Z7M-L1M
02. MDL ID 条形码
03. MDL ID
04.精电料号：TOP123FHD03T
Label Size:48×12mm

序列号	1	2	3	4	5	6	7	8	9	10	11	12	13	14	15	16	17
代码	X	X	X	3	X	X	X	D	S	P	0	X	X	X	X	X	X
描述	GBN代码		等级	B3	年	月	日	FG Code后四位				序列号					

PROPRIETARY NOTE
THIS SPECIFICATION IS THE PROPERTY OF **WISECOCO** HF AND SHALL NOT BE REPRODUCED OR COPIED WITHOUT THE WRITTEN PERMISSION OF **WISECOCO** HF AND MUST BE RETURNED TO **WISECOCO** HF UPON ITS REQUEST

8.0 PRODUCT SERIAL NUMBER

8.2 BOX label

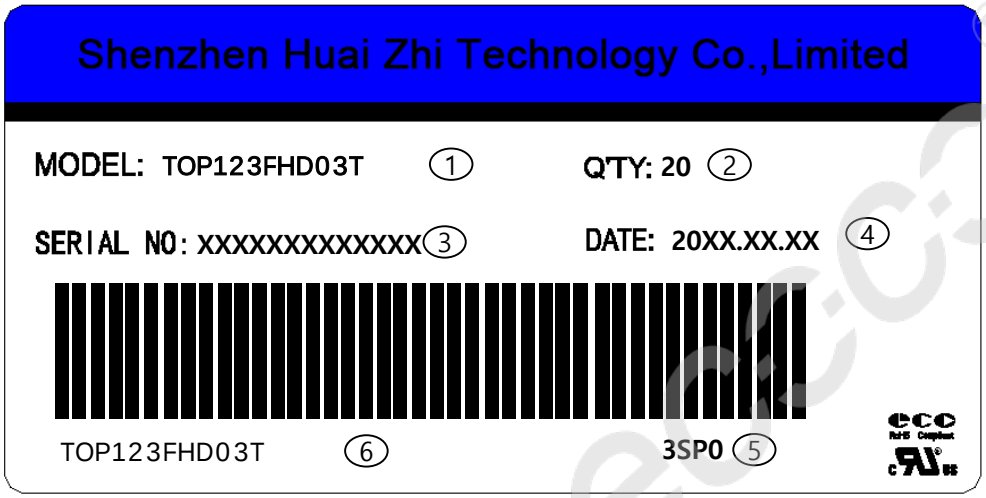

蓝色字体为后打印标识, 说明如下:

Label Size: 110mm*55mm

1. **FG-CODE: AV123Z7M-L1M**
2. **Box 产品数量**
3. **Box ID,** 编码规则如下
4. **Box Packing** 日期
5. **FG-CODE 后四位**
6. 精电料号：TOP123FHD03T

序列号	1	2	3	4	5	6	7	8	9	10	11	12	13
代码	X	X	X	3	X	X	X	X	X	X	X	X	X
描述	GBN代码		等级	B3	年份		月	Rev	序列号				

9.0 PRECAUTIONS

9.1 Handing

(1) Use fingerstalls with soft gloves in order to keep display clean during the incoming inspection and assembly process.
(2) You must mount a module using specified mounting holes (Details refer to the drawings).
(3) Please make sure to avoid external forces applied to the Source PCB or FPC and D-IC during the process of handling or assembling. If not, It causes panel damage or malfunction.
(4) Note that polarizers are very fragile and could be easily damaged. Do not touch, push or rub the exposed polarizers with glass, tweezers or anything harder than HB pencil lead. And please do not rub with dust clothes with chemical treatment.
(5) Do not pull or fold the source D-IC which connect the source PCB or FPC and the panel. Do not pull or fold the LED wire.
(6) After removing the protective film, when the surface becomes dusty, please wipe gently with absorbent cotton or other soft materials like chamois soaks with alcohol or purified water. Do not strong polar solvent because they cause chemical damage to the polarizer
(7) Wipe off saliva or water drops as soon as possible. Their long time contact with . polarizer causes deformations and color fading.
(8) Protection film for polarizer on the module shall be slowly peeled off just before use so that the electrostatic charge can be minimized.
(9) Since the LCD is made of glass, do not apply strong mechanical impact or static load onto it. Handling with care since shock, vibration, and careless handling may seriously affect the product. If it falls from a high place or receives a strong shock, the glass may be broken.
(10) Do not disassemble the module.
(11) To determine the optimum mounting angle, refer to the viewing angle range in the specification for each model.
(12) If the customer's set presses the main parts of the LCD, the LCD may show the abnormal display. But this phenomenon does not mean the malfunction of the LCD and should be pressed by the way of mutual agreement.
(13)Do not drop water or any chemicals onto the LCD’s surface.
(14)The ITO pad area needs special careful caution because it could be easily corroded. Do not contact the ITO pad area with HCFC, Soldering flux, Chlorine, Sulfur, saliva or fingerprint. To prevent the ITO corrosion, customers are recommended that the ITO area would be covered by UV or silicon.

注：① (4)(6)(7)(8) 涉及到Pol相关条目适用于OC/MDL出货产品，针对Q/Single建议改为LCD surface
②第(14)条适用于Q/Single出货产品

9.2 Operating Precautions

(1) Be careful for condensation at sudden temperature change. Condensation makes damage to polarizer or electrical contacted parts. And after fading condensation, smear or spot will occur.
(2) Module has high frequency circuits. Sufficient suppression to the electromagnetic interference shall be done by system manufacturers. Grounding and shielding methods may be important to minimized the interference.
(3) The electrochemical reaction caused by DC voltage will lead to LCD degradation, so DC drive should be avoided.
(4) The LCD modules use C-MOS LSI drivers, so customers are recommended that any unused input terminal would be connected to Vdd or Vss, do not input any signals before power is turn on, and ground you body, work/assembly area, assembly equipments to protect against static electricity.
(5) Do not exceed the absolute maximum rating value. (supply voltage variation, input voltage variation, variation in part contents and environmental temperature, and so on) Otherwise the Module may be damaged.
(6) Design the length of cable to connect between the connector for back-light and the converter as short as possible and the shorter cable shall be connected directly. The longer cable between that of back-light and that of converter may cause the luminance of LED to lower and need a higher startup voltage(Vs).
(7) Connectors are precise devices for connecting PCB and transmitting electrical signals. Operators should insert and unplug MDL in parallel when assembling MDL.
(8) Do not connect or disconnect the cable to/ from the module at the "Power On" condition.
(9) When the module is operating, do not lose CLK, HS,VS signals. If any one these signals is lost, the LCD panel would be damaged.
(10) Obey the supply voltage sequence. If wrong sequence is applied, the module would be damaged.
(11) Do not re-adjust variable resistor or switch etc.

注：①(1)涉及到Pol相关条目适用于OC/MDL出货产品，针对Q/Single建议改为LCD surface
②(6)(7)涉及到connector相关适用于MDL出货产品

9.3 Electrostatic Discharge Control

(1) Since a module is composed of electronic circuits, it is not strong to electrostatic discharge. Make certain that treatment persons are connected to ground through wrist band etc. And don't touch interface pin directly. Keep products as far away from static electricity as possible.
(2) Avoid the use work clothing made of synthetic fibers. We recommend cotton clothing or other conductivity-treated fibers.

9.4 Precautions for Strong Light Exposure

Strong light exposure causes degradation of polarizer and color filter. It is not allowed to store or run directly in strong light or in high temperature and humidity for a long time.

9.5 Storage Precautions

(1) When storing the LCD modules, avoid exposure to direct sunlight or to the light of fluorescent lamps.
(2) The LCD modules should be stored under the storage temperature range. the recommend condition is: Temperature : 0℃~ 40℃, Relatively humidity: ≤80%, and no more than 1 year.
(3) The LCD modules should be stored in the room without acid, alkali and harmful gas.

9.6 Handling Precautions for Protection Film （不适用于Q/Single出货产品）

(1) Remove the protective film slowly, keeping the removing direction approximate 30-degree not vertical from panel surface, If possible, under ESD control device like ion blower, and the humidity of working room should be kept over 50%RH to reduce the risk of static charge.
(2) In handling the LCD, wear non-charged material gloves. And the conducting wrist to the earth and the conducting shoes to the earth are necessary.

9.7 Operation Condition Guide

(1) Lifetime in this spec. is guaranteed only when Commercial Display is used according to operating usages.
(2) Module used in unnormal orientation mode，need to confirm with the manufacturer.
(3) Do not exceed the absolute maximum rating value. (supply voltage variation, input voltage variation, variation in part contents and environmental temperature, and so on) Otherwise the Module may be damaged.

(4) Dew drop atmosphere should be avoided.
(5) The storage room should be equipped with a good ventilation facility, which has a temperature controlling system.
(6) When expose to drastic fluctuation of temperature (hot to cold or cold to hot) ,the LCD may be affected; Specifically, drastic temperature fluctuation from cold to hot ,produces dew on the LCD's surface which may affect the operation of the polarizer and the LCD.
(7) Response time will be extremely delayed at lower temperature than the operating temperature range and on the other hand at higher temperature LCD may turn black at temperature above its operational range. However those phenomena do not mean malfunction or out of order with the LCD. The LCD will revert to normal operation once the temperature returns to the recommended temperature range for normal operation.

9.8 Others

(1)When returning the module for repair or etc., Please pack the module not to be broken. We recommend to use the original shipping packages.
(2) In order to prevent potential problems, flicker should be adjusted by optimizing the Vcom value in customer LCM.（适用于Q panel/single/OC出货）
(3) If the liquid crystal material leaks from the panel, it should be kept away from the eyes or mouth. In case of contact with hands, legs or clothes, it must be washed away thoroughly with soap.
(4) For the crash damaged or unnecessary LCD, it is recommended to wash off liquid crystalby either of solvents such as acetone and ethanol an should be burned up later.
(5) If you should swallow the liquid crystal, first, wash your mouth thoroughly with water, then drink a lot of water and induce vomiting, and then, consult a physician.
(6) If the liquid crystal should get in your eyes, flush your eyes with running water for at least fifteen minutes.
(7) Client needs to add heat dissipation design , such as fan, water cooling , etc.
(8) After assembling into modules, guarantee that the temperature rise of panel surface does not exceed 20 C at room temperature.
(9) Customers need to drive current down according to derating curve.